DNM 350/5AX

5-axis Vertical Machining Center

Main Spindle DNM 350/5AX

The DNM 350/5AX is equipped with a High-rigid, High-speed spindle.
Designed for a wide range of applications, including heavy cutting and difficult workpiece shapes.

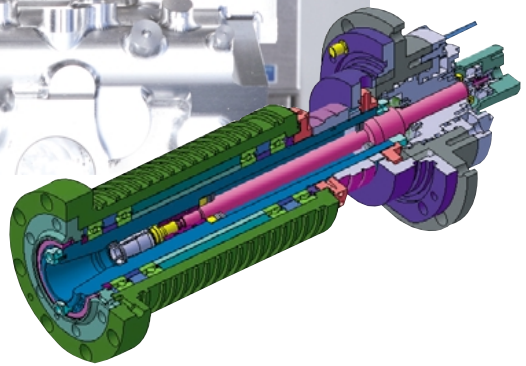

Spindle Speed

NC controller	Power Transmission	Speed	Power
DOOSAN Fanuc i series	Belt	12000 r/min	11/15 kW (14.8 / 20.1 Hp)
Fanuc 31i-A5	Built-in	12000 r/min	18.5/22 kW (24.8 / 29.5 Hp)
Fanuc 31i-A5	Built-in	20000 r/min	18.5/22 kW (24.8 / 29.5 Hp)
Heidenhain iTNC530	Built-in	12000 r/min	24/32 kW (32.2 / 42.9 Hp)
Heidenhain iTNC530	Built-in	20000 r/min	24/32 kW (32.2 / 42.9 Hp)

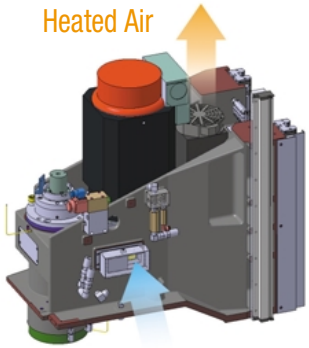

Heated air is forced from the casting and replaced by cooler fresh air.
This minimizes the risk of thermal deformation

Spindle power torque diagram

Fanuc

- Max. spindle speed : 12000 r/min
- Spindle motor power : 11/15 kW (14.8/20.1 Hp)

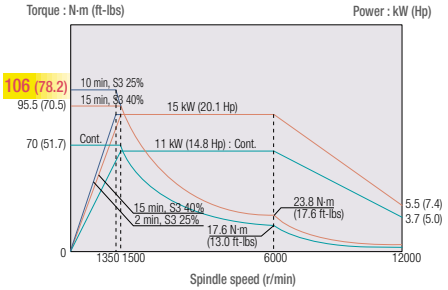

Heidenhain

- Max. spindle speed : 12000 r/min
- Spindle motor power : 24/32 kW (32.2/42.9 Hp)

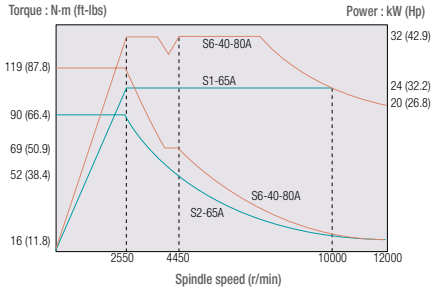

Spindle head cooling system std.

The cooler keeps the cooling oil at a constant temperature.
The oil circulates around the spindle and bearings to minimize thermal deformation of the spindle.

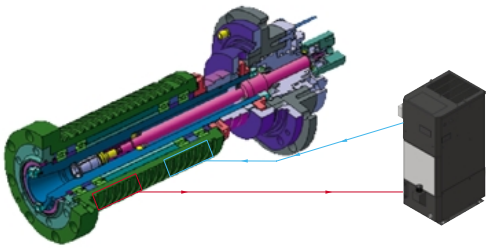

Dual contact system (Big plus) std.

The dual contact system offers simultaneous contact between the machine spindle face and toolholder flange face.

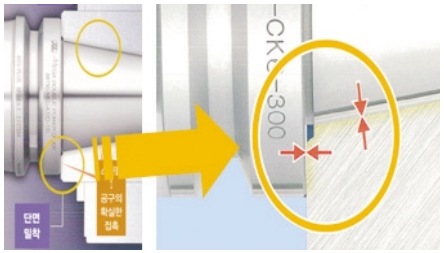

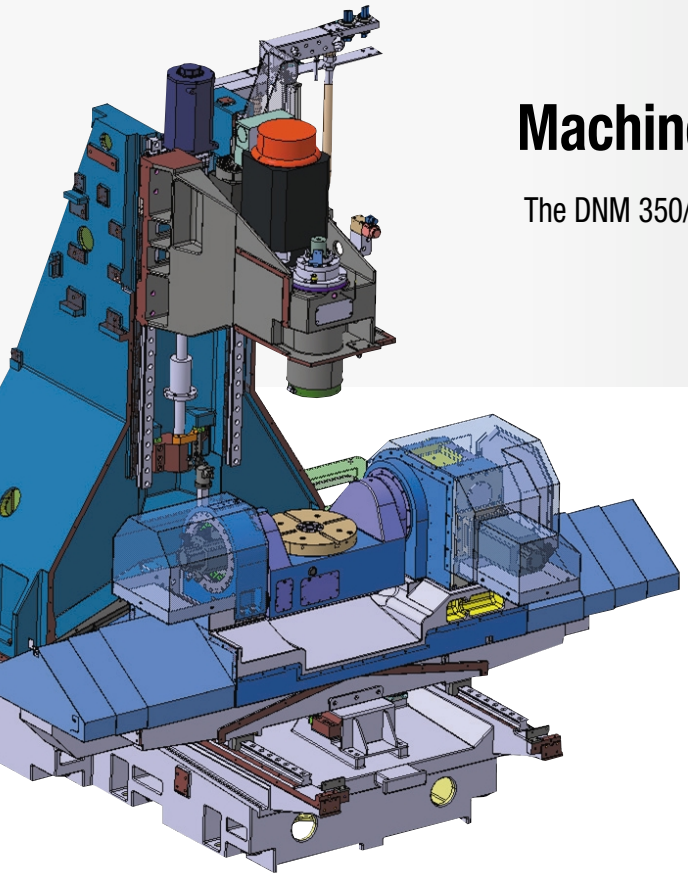

Machine Structure

DNM 350/5AX

The DNM 350/5AX provides High-precision machining using a stable structure created by FEM analysis.

High Rigidity Body

This machine provides High precision and speed by High-stiffness Roller Type LMG, Rigid coupling and ball screw nut cooling system.

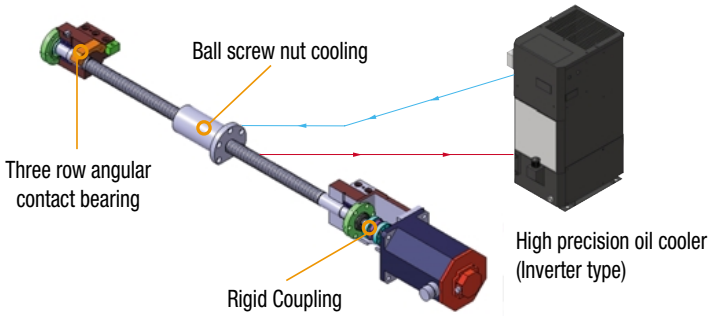

High-Strength Roller LMG

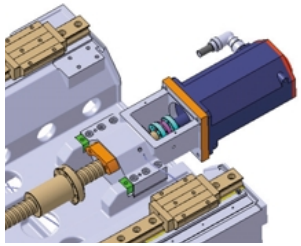

- High-stiffness Roller Type LMG, Ball Screw & Coupling

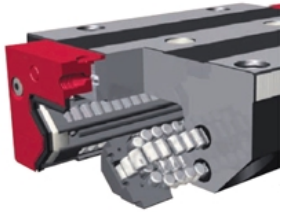

- Strong 45 size roller type linear guide way

Rotary Table

High-precision and high-stiffness

- Applied Axial Radial Roller Cross bearing with High-precision and high-stiffness
- Applied double worm & pinion gear for reduced backlash
- Applied High-precision rotary encoders (A/C axis)

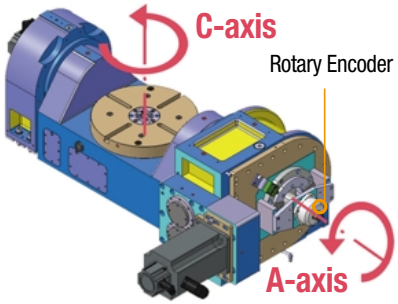

Structure A-axis (Left)

Structure A-axis (Right)

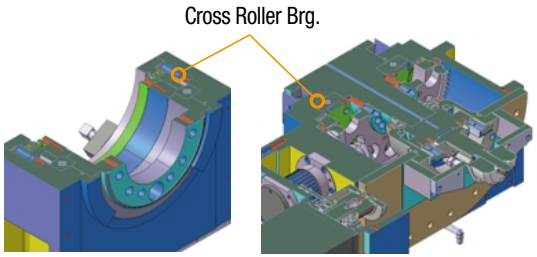

Structure C-axis

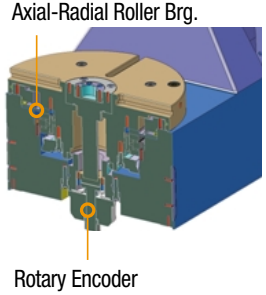

Machine Specifications

	Feature	Unit	Fanuc i series (Simultaneous 4+1 axis)	Fanuc 31i-A5 (Simultaneous 5 axis)	Heidenhain iTNC530 (Simultaneous 5 axis)
Travel	X / Y / Z axis	mm (inch)	400 / 655 / 500 (15.7 / 25.8 / 19.7)		
	A / C axis	deg	+30~-120 / 360		
Feedrate	X / Y / Z axis	m/min (ipm)	36 / 36 / 30 (1417.7 / 1417.3 / 1181.1)		
	A / C axis	r/min	20 / 30		
Table	Table size	mm (inch)	ø 350 (ø 13.8)		
Workpiece	Max. workpiece swing (dia. x height)	mm (inch)	ø 400 x 335 (ø 15.7 x 13.2)		
	Table loading capacity	kg (lb)	250 (551.1)		
Main spindle	Power Transmission		Belt	Built-in	
	Spindle taper		#40-BT / CAT / DIN 40		
	Max. spindle speed	r/min	12000	12000 {20000}	
	Spindle motor	kW (Hp)	11 / 15 (14.8 / 20.1)	18.5 / 22 (24.8 / 29.5)	24 / 32 (32.2 / 41.9)
	Max. spindle torque	N-m (ft-lbs)	106 (78.2)	167 (123.2)	119 (87.8)
Automatic tool changer	Tool storage capacity	ea	30 {40,60}		
	Max. tool length	mm (inch)	250 (9.8)		
	Max. tool weight	kg (lb)	8 (17.6)		
	Tool change time (Tool to Tool)	s	1.3		
NC controller	Display unit	inch	10.4"		15"

{ } : Option

Standard Feature

- Air gun
- Assembly & operation tools
- Automatic tool measurement (TS27R) (4 +1 axis only opt.)
- Coolant tank & chip pan
- Door interlock
- Flood coolant system
- Full enclosure Splash guard
- Installation parts
- Portable MPG
- Screw conveyor
- Signal tower (yellow, red, green)
- Spindle air curtain
- Spindle head cooling system
- Work light

Optional Feature

- A/C axis encorder
- Air blower
- Chip conveyor and chip bucket
- Hydraulic fixture interface
- Linear scale (X, Y, Z axis)
- Mist collector
- MQL system
- Oil skimmer
- Test bar
- Through spindle coolant

- The specifications and information above-mentioned may be changed without prior notice.
- For more details, please contact Doosan.

NC Unit Specifications DOOSAN Fanuc i series

AXES CONTROL	
- Controlled axes	5 (X,Y,Z,C,A)
- Simultaneously controllable axes	
Positioning (G00) / Linear interpolation (G01) : 4 axes	
Circular interpolation (G02, G03) : 2 axes	
- Backlash compensation	
- Least command increment	0.001mm
- Machine lock	all axes / Z axis
- Mirror image	Reverse axis movement (setting screen and M - function)
- Stored pitch error compensation	
Pitch error offset compensation for each axis	

INTERPOLATION & FEED FUNCTION	
- 2nd reference point return	G30
- Circular interpolation	G02, G03
- Cylindrical interpolation	G07.1
- Exact stop check	G09, G61 (mode)
- Feed per minute	
- Feedrate override (10% increments)	0 - 200 %
- Helical interpolation	

- Manual handle feed	1 units
- Manual handle feedrate	0.1/0.01/0.001 mm
- Override cancel	M48 / M49
- Rapid traverse override	F0 (fine feed), 25 / 50 / 100 %
- Reference point return	G27, G28, G29
- Skip function	G31
- AICC II (AI Contour Control II)	200 block preview

SPINDLE & M-CODE FUNCTION	
- Spindle orientation	
- Spindle speed command	S5 digits
- Spindle speed override (10% increments)	10 - 150 %

TOOL FUNCTION	
- Tool nose radius compensation	G40, G41, G42
- Number of tool offsets	400 ea
- Tool length compensation	G43, G44, G49
- Tool life management	128 sets
- Tool number command	T2 digits
- Tool position offset	G45 - G48

- Tool offset memory C	
Geometry / Wear and Length / Radius offset memory	

TOOL FUNCTIONPROGRAMMING & EDITING FUNCTION	
- Background editing	
- Canned cycle	G73, G74, G76, G80 - G89, G99
- Circular interpolation by radius programming	
- Extended part program editing	
- Local / Machine coordinate system	G52 / G53
- Maximum commandable value	±99,999.999 mm
- No. of Registered programs	400 ea
- Part program storage	1280m
- Rigid tapping	
- Thread cutting	G84, G74
- Work coordinate system	G54 - G59

OTHERS FUNCTIONS (Operation, Setting & Display, etc)	
- 3rd / 4th reference return	
- Additional work coordinate system	G54.1 P1 - 48 (48 pairs)
- Automatic corner override	G62
- Coordinate rotation	G68, G69

- Dry run	
- Graphic display	Tool path drawing
- Loadmeter display	
- MDI / DISPLAY unit	
10.4" Color TFT LCD, keyboard for data input, soft-keys	
- Optional angle chamfering / corner R	
- Polar coordinate command	G15 / G16
- Program restart	
- Programmable data input	
Tool offset and work offset are entered by G10, G11	
- Programmable mirror image	G50.1 / G51.1
- Run hour and part number display	
- Scaling	G50, G51
- Single direction positioning	G60
- Stored stroke check 2	
- Embedded Ethernet	

OPTIONAL SPECIFICATIONS	
- Fast data server	
- Dynamic graphic display (w/10.4" Color TFT LCD)	
Machining profile drawing	

External Dimensions

Unit : mm (inch)

Top View

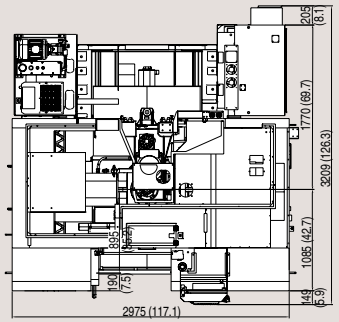

Front View

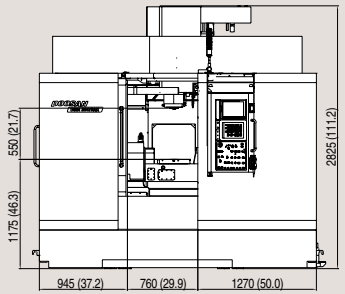

Table Dimension

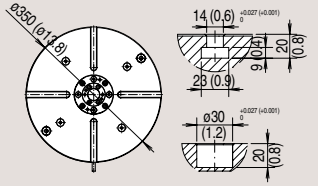

Tool Shank BT40

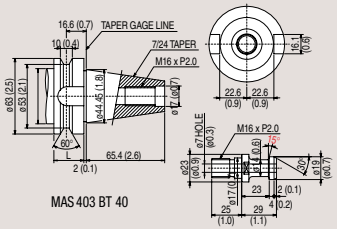

http://www.doosaninfracore.com/machinetools

Doosan Infracore
Machine Tools

Head Office : Doosan Tower 23rd FL., 18-12, Euljiro-6Ga, Jung-Gu, Seoul, Korea 100-730 Tel : ++82-2-3398-8693 / 8671 / 8680 Fax : ++82-2-3398-8699
Doosan Infracore America Corp.: 19 Chapin Rd. Pine Brook, NJ 07058, U.S.A. Tel : ++1-973-618-2500 Fax : ++1-973-618-2501
Doosan Infracore Germany GmbH : Hans-Böckler-Strasse 29, D-40764 Langenfeld-Fuhrkamp, Germany. Tel : ++49-2173-8509-0 Fax : ++49-2173-8509-60
Doosan Infracore Yantai Co., LTD : 13 Building, 140 Tianlin Road, Xuhui District, Shanghai, China (200233) Tel : ++86-21-6440-3384 (808, 805) Fax : ++86-21-6440-3389

Design and specifications are subject to change without prior notice.